Experiment–5: I-V Characteristics of Bipolar Junction Transistor (BJT)

Group no: - 14	Date of Experiment: - 21/08/2023
Roll no: - 22CS02002 20CS02012	Name: - Soham Chakraborty - Kasthuri Hrushikesh

Part- 1: I–V Characteristics of the Base-Emitter Junction

Aim of the Experiment: - Set up a circuit to understand the behavior of a BJT.

Equipment required: -

- Required resistor values- 47 kΩ ,100 Ω
- Breadboard (×1)
- Variable DC power supply
- BC547 transistor.
- Digital Multimeter to measure Voltage/Resistance.
- Connecting wires

Circuit Diagram: -

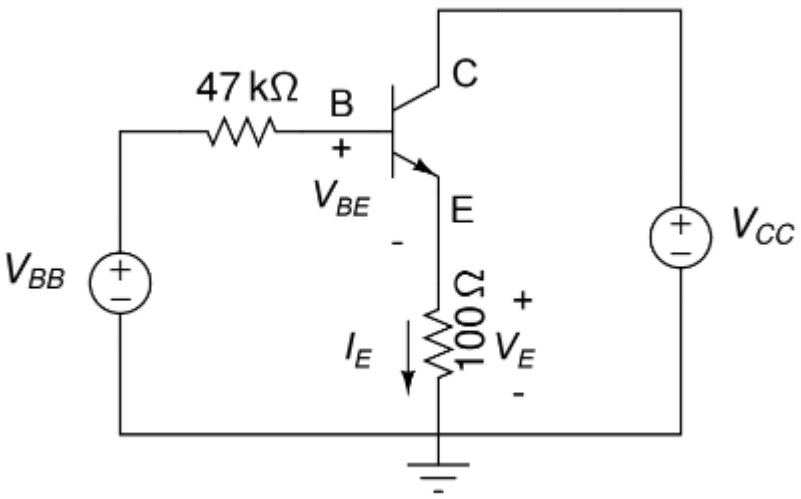

Observation Table: -

At V_{CC}=5V

V_{BB} (V)	Base-Emitter voltage V_{BE} (V)	V_E (V)	I_E= V_E /100 (mA)
0.193	**0.191**	**0**	**0**
0.4	**0.396**	**0**	**0**
0.5	**0.5**	**0**	**0**
0.71	**0.604**	**0.034**	**0.00034**
1	**0.63**	**0.130**	**0.0013**
1.19	**0.65**	**0.195**	**0.00195**
1.5	**0.65**	**0.31**	**0.0031**
1.7	**0.665**	**0.378**	**0.00378**
2.01	**0.669**	**0.49**	**0.0049**
2.21	**0.673**	**0.568**	**0.00568**
2.5	**0.678**	**0.67**	**0.0067**
2.75	**0.679**	**0.762**	**0.00762**
3	**0.681**	**0.857**	**0.00857**
3.25	**0.684**	**0.945**	**0.00945**
3.5	**0.684**	**1.039**	**0.01309**
4	**0.686**	**1.226**	**0.01226**
4.51	**0.689**	**1.412**	**0.01412**
4.8	**0.691**	**1.513**	**0.01513**
5	**0.692**	**1.591**	**0.01591**

At V_{CC}=12V

V_{BB} (V)	Base-Emitter voltage V_{BE} (V)	V_E (V)	I_E= V_E /100 (mA)
0.217	**0.217**	**0**	**0**
0.406	**0.402**	**0**	**0**
0.704	**0.602**	**0.032**	**0.00032**
	0.604	**0.034**	**0.00034**
1.01	**0.635**	**0.137**	**0.00137**
1.21	**0.642**	**0.210**	**0.00210**
1.52	**0.649**	**0.321**	**0.00321**
1.69	**0.650**	**0.393**	**0.00393**
2.0	**0.651**	**0.52**	**0.0052**
2.21	**0.651**	**0.591**	**0.00591**
2.49	**0.652**	**0.709**	**0.00709**
2.76	**0.653**	**0.822**	**0.00822**
3	**0.654**	**0.916**	**0.00916**
3.25	**0.656**	**1.034**	**0.01034**
3.5	**0.656**	**1.121**	**0.01121**
4.02	**0.657**	**1.347**	**0.01347**
4.51	**0.669**	**1.55**	**0.0155**
4.76	**0.671**	**1.657**	**0.01657**
5.01	**0.682**	**1.774**	**0.01774**

Plot of I_E vs V_{BE} and $\ln(I_E)$ vs V_{BE}

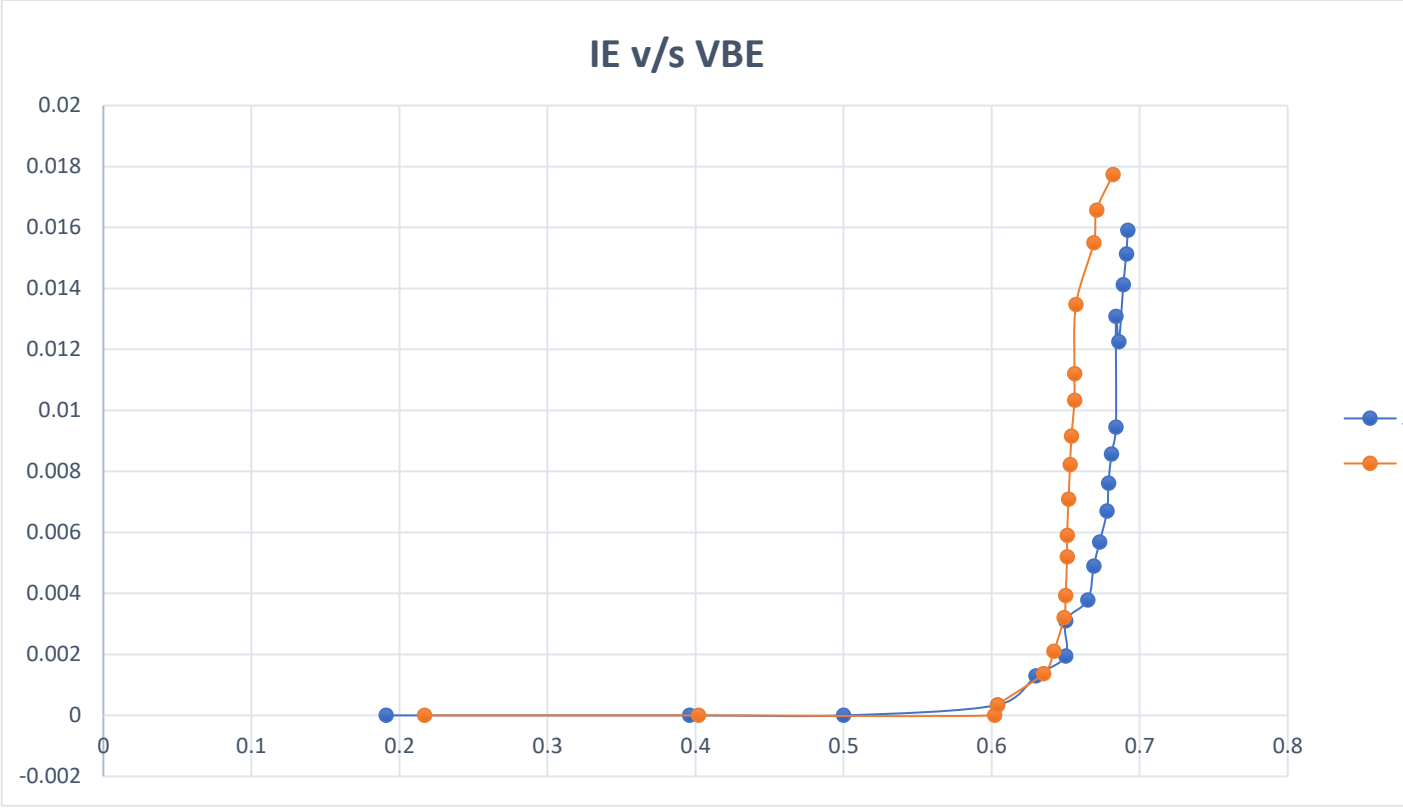

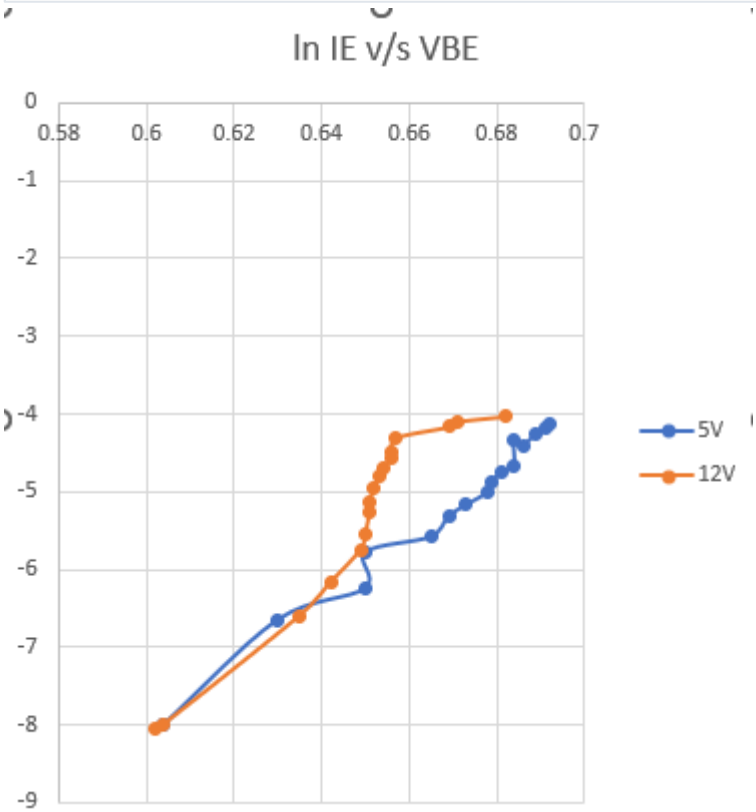

Conclusion :-

I have observed that In a BJT (Bipolar Junction Transistor), as the collector-to-emitter voltage (V_{cc}) increases, the cutoff voltage remains relatively constant. The cutoff voltage, also known as the base-emitter voltage (V_{be}), is the voltage required to turn off the transistor and prevent current flow from the collector to the emitter. It is typically around 0.6 to 0.7 volts for silicon BJTs. Increasing Vcc primarily affects the transistor's operating region. As Vcc increases, the transistor can operate in its active region or saturation region, depending on the biasing conditions and the voltages applied to the transistor terminals. However, it does not significantly impact the cutoff voltage itself, which is primarily determined by the characteristics of the semiconductor material used in the transistor. changing Vcc can impact the BJT's mode of operation and its performance characteristics, it does not alter the fundamental bandgap energy of the semiconductor material, which determines the cutoff voltage (Vbe). That is why the cutoff voltage remains relatively constant within the typical range for silicon BJTs, regardless of changes in Vcc.

To summarize, Vcc primarily influences the operating mode of the BJT, but the cutoff voltage remains relatively constant within its typical range for silicon BJTs.

Part-2: Measure the collector-base I-V characteristics of a BJT

Aim of the Experiment: - Measure the transistor current gains α and β.

Equipments required: -

- Required resistor values– 180 kΩ (×1), 100Ω (×1)
- Variable DC power supply (0-15V)
- Constant DC power supply (5V,12V)
- BJT (BC547)
- Multimeter
- Breadboard (×1)
- Connecting wires

Circuit Diagram: -

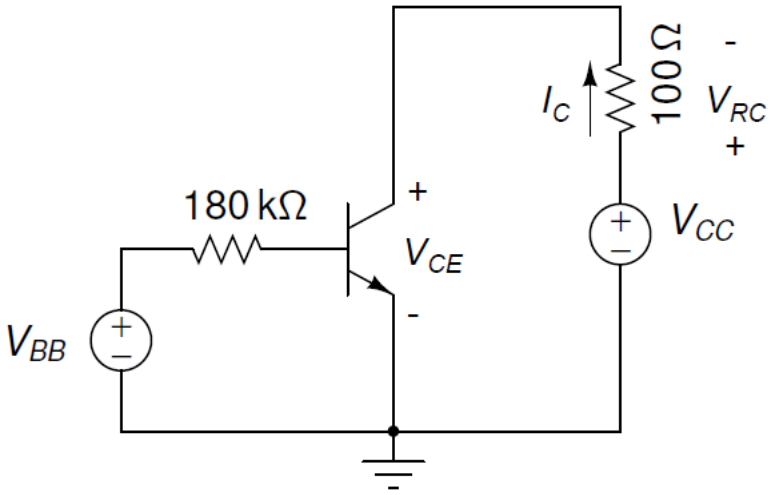

V_{CC} = 0-10V

V_{BB} = 5V, 12V

R_B = 180k

Observation Table: -

V_{BB} = 5V, V_B = 4.46V , I_B = V_B/R_B = 0.0248A

V_{CC} (in V)	V_{CE} (in V)	V_{RC} (in V)	$I_C = V_{RC} / 100$ (in mA)
0.5	0.139	0.387	3.87
1.01	0.668	0.343	3.43
1.5	0.827	0.665	6.65
2	1.3	0.67	6.7
2.5	1.81	0.673	6.73
3	2.32	0.685	6.85
3.5	2.82	0.686	6.86
4	3.29	0.69	6.9
4.5	3.89	0.689	6.89
5	4.24	0.696	6.96
5.5	4.78	0.702	7.02
6	5.25	0.707	7.07
6.5	5.8	0.712	7.12
7	6.24	0.716	7.16
7.5	6.79	0.721	7.21
8	7.21	0.723	7.23
8.5	7.81	0.726	7.26
9	8.16	0.731	7.31
9.5	8.79	0.739	7.39
10	9.26	0.745	7.45

V_{BB} = 12V, V_B = 11.50V , I_B = V_B/R_B = 0.0639A

V_{CC} (in V)	V_{CE} (in V)	V_{RC} (in V)	$I_C = V_{RC} / 100$ (in mA)
0.5	0.092	0.480	4.8
1.01	0.136	0.854	8.54
1.5	0.208	1.302	13.02
2	0.490	1.56	15.6
2.5	0.82	1.63	16.3
3	1.32	1.7	17.0
3.5	1.79	1.72	17.2
4	2.31	1.75	17.5
4.5	2.72	1.77	17.7
5	3.17	1.8	18
5.5	3.71	1.81	18.1
6	4.15	1.84	18.4
6.5	4.61	1.86	18.6
7	5.15	1.88	18.8
7.5	5.58	1.92	19.2
8	6.03	1.94	19.4
8.5	6.53	1.97	19.7
9	6.98	1.99	19.9
9.5	7.48	2.01	20.1
10	7.92	2.05	20.5

I_C vs V_{CE} plot:-

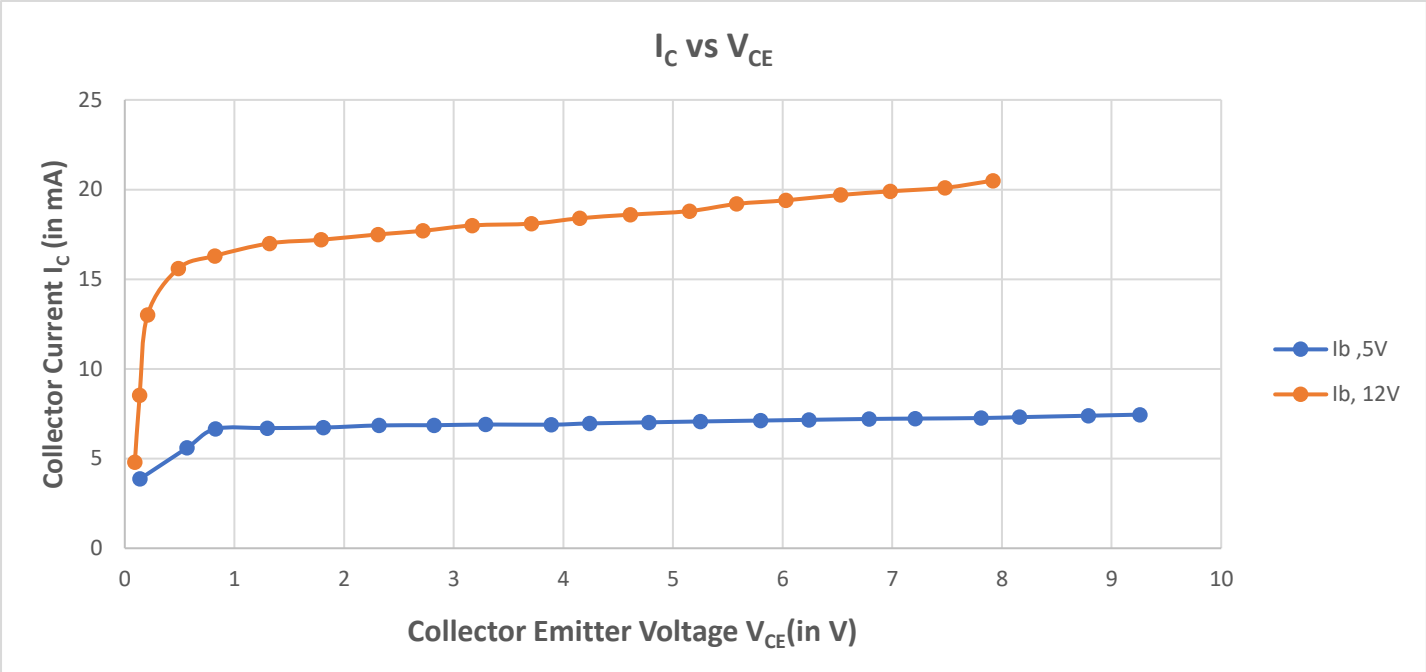

Calculation: -

The base current I_B is calculated using ohm's Law from V_B and R_B

$$I_B = \frac{Vb}{Rb}$$

Using, this get $\mathbf{I_{B,12V} = 0.0639A, I_{B,5V} = 0.0248A.}$

From the slope of I_C vs V_{CE} graph we get the value of

$\mathbf{r_{CE}} = \mathbf{0.577\Omega}$ at $V_{BB} = 12V$

$\mathbf{r_{CE}} = \mathbf{0.331\Omega}$ at $V_{BB} = 5V$

Early Voltage $\mathbf{V_A}$ equals the negative x-intercept of the graph, which on calculating theoretically from the equation of a line turns out to be $\mathbf{V_A = 23.5V}$

Part-3: Measurement of DC Current Gain β

Aim of the Experiment: - Measure the transistor current gains α and β.

Equipments required: -

- Required resistor values– 47 kΩ (×1), 100Ω (×1)
- Variable DC power supply (0-15V)
- Constant DC power supply (12V)
- BJT (BC547)
- Multimeter
- Breadboard (×1)
- Connecting wires

Circuit Diagram: -

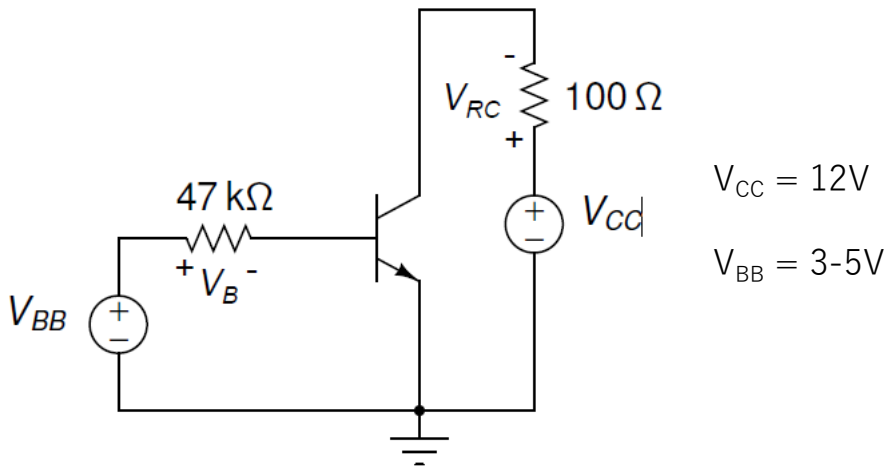

Observation Table: -

V_{BB} (in V)	V_B (in V)	$I_B = V_B/47$ (in mA)	V_{RC} (in V)	$I_C = V_{RC} / 100$ (in mA)
3.0	2.3	0.049	1.57	15.7
3.2	2.55	0.054	1.75	17.5
3.42	2.76	0.059	1.89	18.9
3.675	3.01	0.064	2.05	20.5
3.82	2.97	0.063	2.04	20.4
4.0	3.17	0.067	2.18	21.8
4.16	3.36	0.071	2.29	22.9
4.42	3.55	0.075	2.47	24.7
4.69	3.82	0.081	2.65	26.5
4.87	3.99	0.085	2.75	27.5
5.0	4.10	0.087	2.84	28.4

I_C vs I_B plot:-

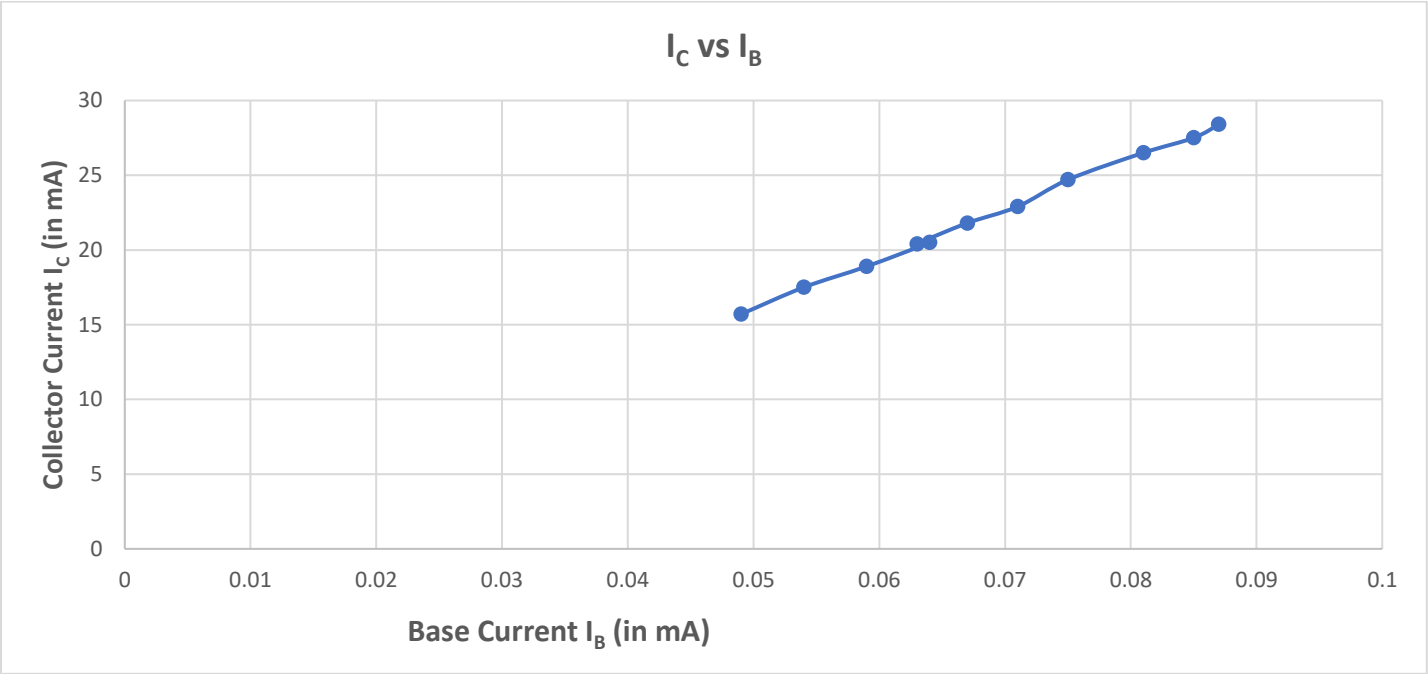

Current Gain $\beta = \frac{Ic}{Ib} = \frac{21.8-18.9}{0.067-0.059} = 362.5$

Calculation: -

Current gain β is calculated using by taking the slope of the I_C vs I_B which is calculated by taking 2 points (0.067,21.8) and (0.059,18.9).

$$\beta = \frac{\Delta Ic}{\Delta Ib} = 362.5$$

Conclusion: -

- In this experiment we practically inferred the values of I_C and I_B plotted the graph and calculed the value of Current gain β from the slope.
- I_C vs I_B was observed to be nearly linear after plotting.
- We can observe slight deviation from a perfectly linear graph. This occurs due to errors in resistance and/or heating up causing thermal errors.

Discussion:-

- A single npn BJT was used to drive this differential amplifier. The collector current entering the npn BJT will be the current source driving the differential amplifier. The transistor is good component to get amplified current using a very small current. DC current gain increases as Voltage increases. But DC current gain for the same voltage with the different base current is same. Each part has different base current but if DC current gain is found for same voltage on different curves it will come out to be about same.

- **Why does I_C vs V_{CE} plot is not parallel and rather has a non-zero slope?**

This is due to the fact that in theory the BJT is assumed to be ideal. But in reality other factors are also included. Some of the factors which are a reason for non-zero slope are:-

1. Early Effect - is a phenomenon where the collector current (IC) exhibits a dependence on the collector-emitter voltage (VCE) due to the early widening of the base-collector depletion region as VCE increases
2. Non-ideal transistor parameters
3. Temperature Effects:- Temperature also effects the output values of the transistor, as well the resistance.
4. Other stray effects:- Stray capacitance and inductance can affect the high-frequency response of the transistor.